Cambridge Assessment International Education

Cambridge IGCSE™

PHYSICS **0625/23**

Paper 2 Multiple Choice (Extended) **October/November 2020**

45 minutes

You must answer on the multiple choice answer sheet.

You will need: Multiple choice answer sheet
Soft clean eraser
Soft pencil (type B or HB is recommended)

INSTRUCTIONS

- There are **forty** questions on this paper. Answer **all** questions.
- For each question there are four possible answers **A**, **B**, **C** and **D**. Choose the **one** you consider correct and record your choice in soft pencil on the multiple choice answer sheet.
- Follow the instructions on the multiple choice answer sheet.
- Write in soft pencil.
- Write your name, centre number and candidate number on the multiple choice answer sheet in the spaces provided unless this has been done for you.
- Do **not** use correction fluid.
- Do **not** write on any bar codes.
- You may use a calculator.
- Take the weight of 1.0 kg to be 10 N (acceleration of free fall = 10 m / s^2).

INFORMATION

- The total mark for this paper is 40.
- Each correct answer will score one mark. A mark will not be deducted for a wrong answer.
- Any rough working should be done on this question paper.

This document has **16** pages. Blank pages are indicated.

IB20 11_0625_23/4RP
© UCLES 2020

[Turn over

www.root19.com +91 - 9969 353 391

1 A micrometer screw gauge reads 0.02 mm when the jaws are fully closed. It reads 0.56 mm when measuring the diameter of a metal wire.

What is the diameter of the wire?

A 0.36 mm **B** 0.54 mm **C** 0.56 mm **D** 0.58 mm

2 Object P moves at a constant speed of 5 m / s repeatedly backwards and forwards in a straight line.

Object Q moves at a constant speed of 5 m / s vertically downwards.

Object R moves at a constant speed of 5 m / s in a circle.

Which objects are moving with uniform velocity?

A P only **B** Q only **C** R only **D** Q and R

3 The diagram shows a velocity–time graph for an object which is accelerating.

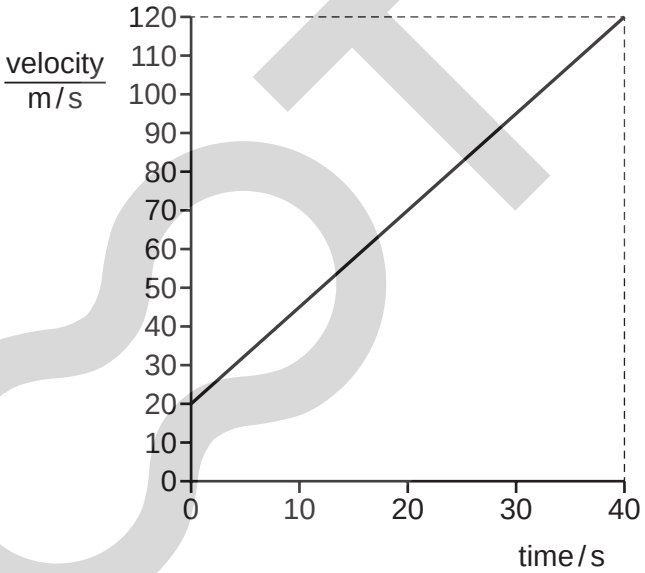

What is the acceleration of the object?

A 0.40 m / s^2 **B** 2.5 m / s^2 **C** 3.0 m / s^2 **D** 100 m / s^2

4 Which quantity is weight an example of?

A acceleration

B force

C mass

D pressure

www.root19.com +91 - 9969 353 391

5 An object of mass 1.0 kg is at rest on Earth. An identical object is at rest on a planet with a gravitational field strength of twice that on Earth.

Which row correctly compares the object on the planet to the object on Earth?

	its weight	its acceleration when the same horizontal force is applied
A	double	equal to that on Earth
B	double	half that on Earth
C	half	equal to that on Earth
D	half	half that on Earth

6 A square wooden raft floats on a lake. The density of the water in the lake is 1000 kg / m^3.

The sides of the raft are 2.0 m long and the thickness of the raft is 0.20 m.

The mass of the raft is 700 kg.

How many barrels, each of mass 100 kg, could be placed on the raft before its surface sinks to the surface of the water?

A 1 **B** 7 **C** 8 **D** 15

7 The diagram shows a car moving along a road.

The force due to the engine is 1500 N and the total drag force is 200 N.

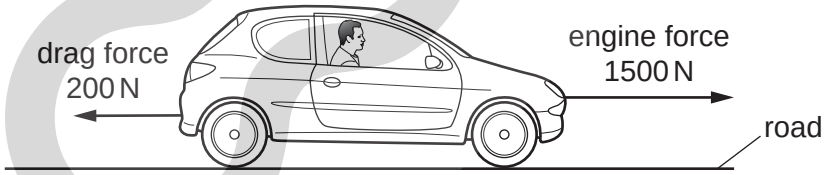

What is the motion of the car?

A constant speed

B decreasing speed

C increasing speed

D reversing

© UCLES 2020
www.root19.com

+91 - 9969 353 591

8 The diagram shows a trolley used to transport a load of 400 N.

A force *F* vertically downwards is needed to balance the trolley as shown.

The centre of mass of the trolley is vertically above the pivot.

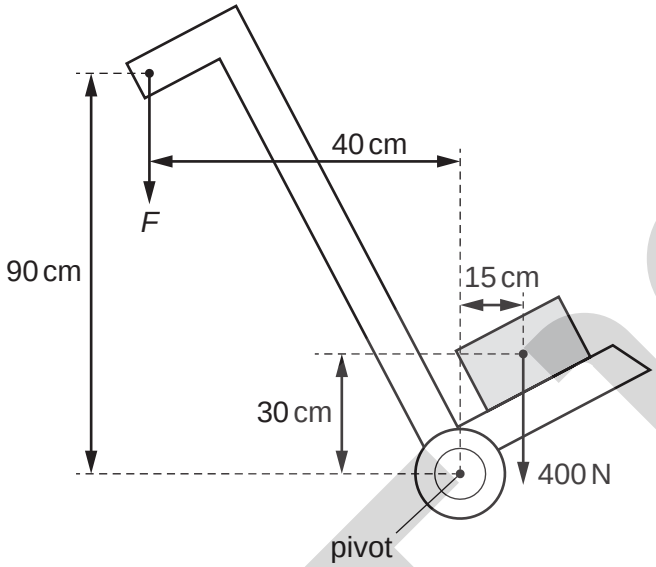

What is the value of *F*?

A 133 N **B** 150 N **C** 300 N **D** 400 N

9 A ball of mass *m* falls vertically and hits a hard surface.

Its speed on hitting the surface is v_1.

It rebounds vertically upwards with speed v_2.

What is the change in momentum of the ball?

A mv_1 **B** mv_2 **C** $m(v_1 + v_2)$ **D** $m(v_2 - v_1)$

10 An object of mass 4.5 kg is travelling at 7.0 m / s.

How much kinetic energy does the object have?

A 16 J **B** 32 J **C** 110 J **D** 220 J

11 A number of ways in which we use energy are listed.

In which is the ultimate source of energy **not** the Sun?

A Energy is provided by a horse to pull a cart.

B Energy is provided by hydroelectric generators to heat a house.

C Energy is provided by a nuclear power station.

D Energy is provided by a windmill to pump water to a fountain.

www.root19.com +91 - 9969 353 391

12 To calculate the power produced by a force, the size of the force must be known.

What else needs to be known to calculate the power?

	the distance that the force moves the object	the time for which the force acts on the object
A	✓	✓
B	✓	✗
C	✗	✓
D	✗	✗

key
✓ = needed
✗ = not needed

13 A student calculates the pressure due to the liquid at point X.

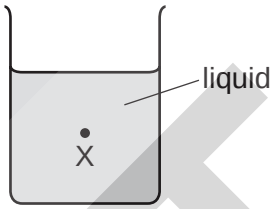

The student takes four measurements.

1 density of the liquid
2 temperature of the liquid
3 depth of point X below the surface of the liquid
4 surface area of the liquid

Which measurements must the student use in her pressure calculation?

A 3 and 4 **B** 1 and 3 **C** 1 and 2 **D** 2 and 3

14 The diagram shows a mercury barometer.

Which height is used as a measurement of atmospheric pressure?

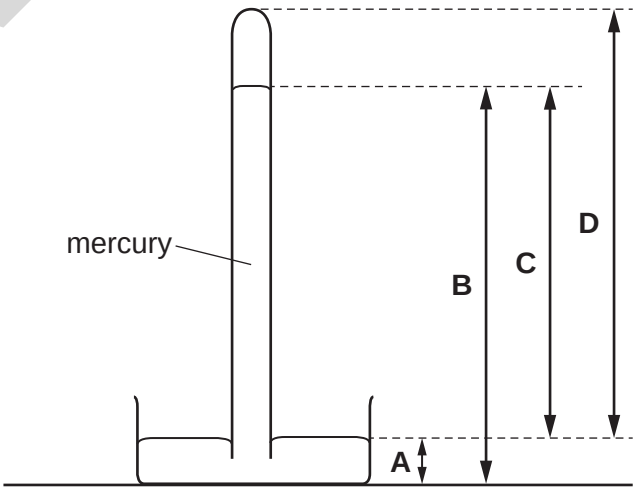

www.root19.com +91 - 9969 353 591

15 A student splashes water on to her face. Here are three statements about the effects.

P The water uses energy to evaporate.

Q The water gains energy from the student.

R The face of the student cools.

Which statements are correct?

A P and Q only **B** P and R only **C** Q and R only **D** P, Q and R

16 Equal volumes of solids and liquids experience different changes of volume when they are heated through the same temperature range.

What is the reason for this?

A The average increase in separation of the particles in a liquid is greater than the average increase in separation of those in a solid.

B The average increase in separation of the particles in a liquid is less than the average increase in separation of those in a solid.

C The particles in liquids expand by less than those in solids.

D The particles in liquids expand by more than those in solids.

17 Which physical property changes when temperature is measured with a liquid-in-glass thermometer?

A electromotive force

B pressure

C resistance

D volume

© UCLES 2020
www.root19.com

+91 - 9969 353 391

18 The diagram shows steam being passed into water to raise the temperature of the water.

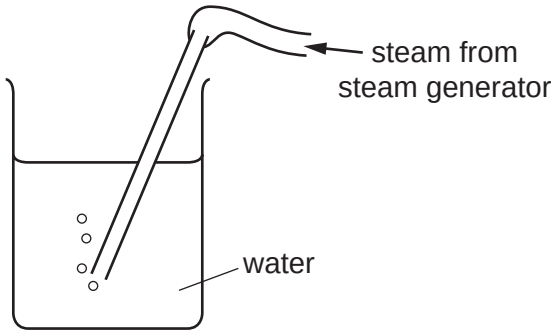

The specific latent heat of steam is 2200 J / g.

The specific heat capacity of water is 4.2 J / (g °C).

The mass of water being heated is 490 g.

Which mass of steam must be passed into the water to raise the water temperature from 19 °C to 100 °C?

A 19 g **B** 76 g **C** 80 g **D** 95 g

19 The diagram shows the view of a room heated by a radiator. The arrowed line from X to Y is the path of the convection current in the air.

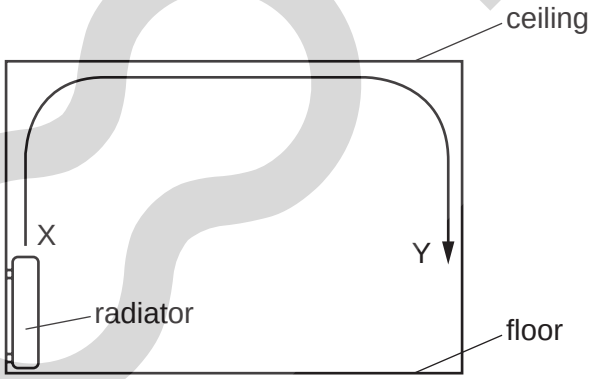

Which row about the air temperature and the air density at X and at Y is correct?

	air temperature	air density
A	higher at X	higher at X
B	higher at X	higher at Y
C	higher at Y	higher at Y
D	higher at Y	higher at X

© UCLES 2020
www.root19.com

+91 - 9969 353 591

20 A warm dark-coloured surface emits radiation. It is decided to increase the amount of radiation produced.

Three suggestions are made.

1 Make the surface hotter.

2 Colour the surface white.

3 Increase the area of the surface.

Which suggestions are correct?

A 1 only **B** 1 and 2 only **C** 1 and 3 only **D** 1, 2 and 3

21 Which row correctly describes light waves?

	wave type	direction of vibrations
A	longitudinal	parallel to direction of wave travel
B	longitudinal	perpendicular to direction of wave travel
C	transverse	parallel to direction of wave travel
D	transverse	perpendicular to direction of wave travel

22 A water wave has a speed of 2.0 m / s.

4.0 complete waves pass a point every 10 seconds.

What is the wavelength of the wave?

A 0.50 m **B** 0.80 m **C** 5.0 m **D** 8.0 m

23 A driver sits in a car. She has a rear-view plane mirror 0.5 m in front of her. A bus is 7.5 m behind the driver.

The driver looks at the image of the bus in her mirror.

How far is the image away from her?

A 1.0 m **B** 7.5 m **C** 8.0 m **D** 8.5 m

© UCLES 2020
www.root19.com

+91 - 9969 353 391

24 The diagram shows white light passing through a prism.

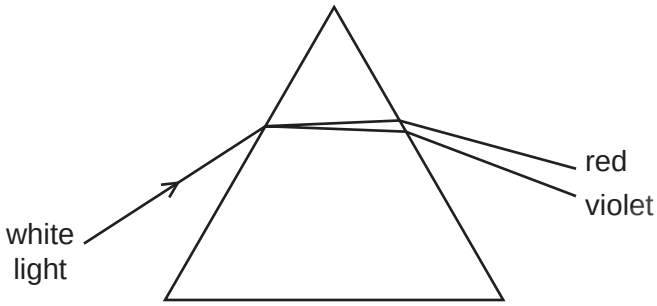

Which description of what happens as the light passes into the prism is correct?

A The speed of the red light is less than the speed of the violet light and the red light is the least refracted.

B The speed of the red light is greater than the speed of the violet light and the red light is the least refracted.

C The speed of the violet light is less than the speed of the red light and the violet light is the least refracted.

D The speed of the violet light is greater than the speed of the red light and the violet light is the least refracted.

25 The diagram shows three types of electromagnetic radiation listed in a particular order. The electromagnetic radiation is travelling in a vacuum.

Which quantities increase in magnitude going from left to right across the list?

A frequency only

B neither speed nor frequency

C speed and frequency

D speed only

26 A sound wave travels through air.

What name is given to a region in which the air molecules are further apart than normal?

A compression

B contraction

C rarefaction

D vacuum

www.root19.com +91 - 9969 353 591

27 A police car with its siren sounding is stationary in heavy traffic. A pedestrian notices that, although the loudness of the sound produced does not change, the pitch varies.

Which row describes the amplitude and the frequency of the sound?

	amplitude	frequency
A	constant	constant
B	constant	varying
C	varying	constant
D	varying	varying

28 A piece of steel is slightly magnetised. It is hit several times with a hammer.

What effect will this have on the steel?

	the steel is parallel to a strong magnetic field	the steel is at right-angles to a weak magnetic field
A	it becomes magnetised more strongly	it becomes magnetised more strongly
B	it becomes magnetised more strongly	it loses its magnetism
C	it loses its magnetism	it becomes magnetised more strongly
D	it loses its magnetism	it loses its magnetism

29 A negatively charged cloud passes over a tall steel-framed building. A charge is induced on the building by the cloud because charges flow through the building.

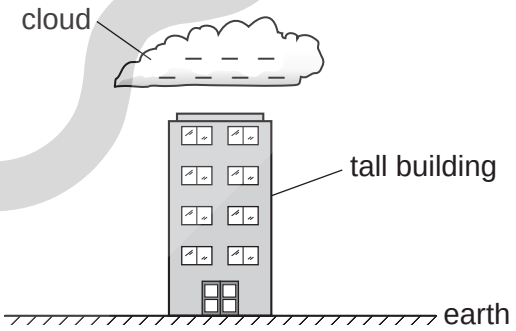

What charge is induced on the building and in which direction do the charge carriers move?

	charge induced on building	direction of charge flow
A	positive	from the building to earth
B	positive	from earth to the building
C	negative	from the building to earth
D	negative	from earth to the building

www.root19.com +91 - 9969 353 391

30 Electromotive force (e.m.f.) is defined in terms of the energy supplied in driving which physical quantity around a complete circuit?

A charge

B current

C potential difference (p.d.)

D power

31 A student uses four ammeters P, Q, R and S to measure the current in different parts of the circuit shown.

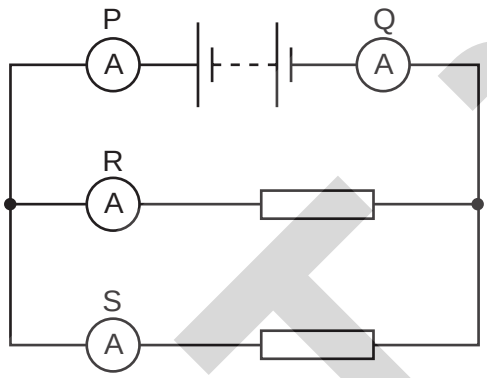

Which two ammeters read the largest current?

A P and Q **B** P and R **C** R and Q **D** R and S

32 Three statements about a relay are given.

1 A relay has a coil that becomes a temporary magnet when in operation.

2 A large current in a relay coil is used to switch off a smaller current.

3 A small current in a relay coil is used to switch on a larger current.

Which statements are correct?

A 1 and 2 only **B** 2 and 3 only **C** 1 and 3 only **D** 1, 2 and 3

© UCLES 2020
www.root19.com

+91 - 9969 353 591

33 Which combination of logic gates gives the truth table shown?

inputs		output
X	Y	Z
0	0	1
0	1	1
1	0	1
1	1	0

A

B

C

D

34 Graph X shows the output from an a.c. generator.

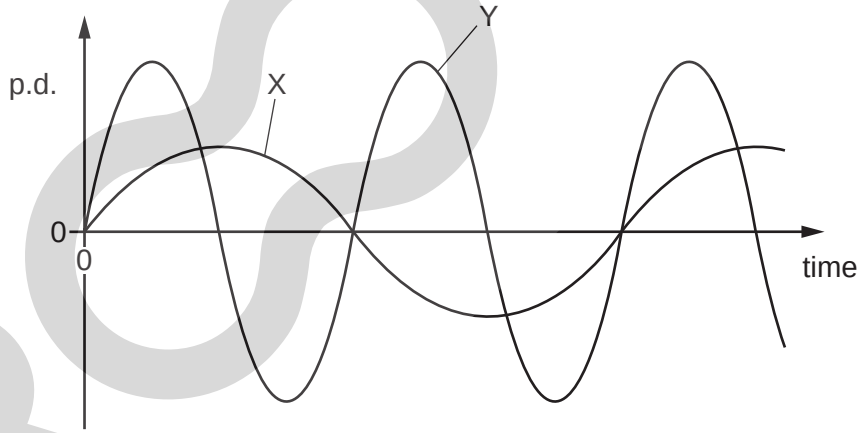

Which changes can be made so that the generator produces graph Y?

A Decrease the magnetic field strength and decrease the speed of rotation only.

B Increase the magnetic field strength and decrease the number of coils only.

C Increase the number of coils only.

D Increase the speed of rotation only.

www.root19.com +91 - 9969 353 391

35 A transformer is needed to convert a supply of 240 V a.c. into 4800 V a.c..

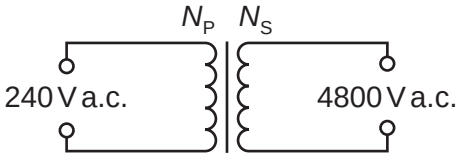

Which pair of coils would be suitable for this transformer?

	number of turns on primary coil N_P	number of turns on secondary coil N_S
A	50	1 000
B	240	48 000
C	480	24
D	2000	100

36 The diagram shows a wire carrying a current in the direction shown. There is a magnetic field acting from left to right. The wire experiences a force acting out of the page.

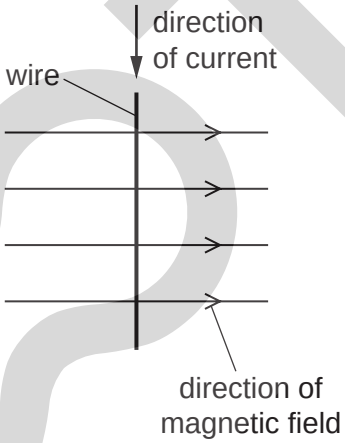

The current is now reversed.

In which direction does the force on the wire now act?

A into the page

B out of the page

C to the left

D to the right

37 Which statement is correct for the nucleus of **any** atom?

A The nucleus contains electrons, neutrons and protons.

B The nucleus contains the same number of protons as neutrons.

C The nucleus has a total charge of zero.

D The nucleus is very small compared with the size of the atom.

38 How many protons and how many neutrons are in a nucleus of $^{234}_{90}Th$?

	protons	neutrons
A	90	144
B	90	234
C	144	90
D	234	90

39 Which statement about γ-rays is correct?

A They are deflected by both electric and magnetic fields.

B They are deflected by magnetic fields but not by electric fields.

C They are deflected by electric fields but not by magnetic fields.

D They are not deflected either by electric fields or by magnetic fields.

40 Which equation represents the β-decay of lead-209?

A $^{209}_{82}Pb + ^{0}_{-1}e \rightarrow ^{209}_{83}Bi$

B $^{209}_{82}Pb + ^{0}_{-1}e \rightarrow ^{209}_{81}Tl$

C $^{209}_{82}Pb \rightarrow ^{209}_{83}Bi + ^{0}_{-1}e$

D $^{209}_{82}Pb \rightarrow ^{209}_{81}Tl + ^{0}_{-1}e$

© UCLES 2020
www.root19.com

+91 - 9969 353 391

BLANK PAGE

© UCLES 2020
www.root19.com

+91 - 9969 353 391

BLANK PAGE

Permission to reproduce items where third-party owned material protected by copyright is included has been sought and cleared where possible. Every reasonable effort has been made by the publisher (UCLES) to trace copyright holders, but if any items requiring clearance have unwittingly been included, the publisher will be pleased to make amends at the earliest possible opportunity.

To avoid the issue of disclosure of answer-related information to candidates, all copyright acknowledgements are reproduced online in the Cambridge Assessment International Education Copyright Acknowledgements Booklet. This is produced for each series of examinations and is freely available to download at www.cambridgeinternational.org after the live examination series.

Cambridge Assessment International Education is part of the Cambridge Assessment Group. Cambridge Assessment is the brand name of the University of Cambridge Local Examinations Syndicate (UCLES), which itself is a department of the University of Cambridge.

www.root19.com +91 - 9969 353 391